TECHNICAL DATASHEET

LEAD - ACID STARTER BATTERY

BATTERY TYPE SILVER SEALED	12V 95Ah	PS95.0
CATALOGUE NUMBER		

GENERAL PROPERTIES	
Case Type	LB5
Voltage (V)	12 V
Capacity C20	95 Ah
Cold cranking current -18º	750A -(EN)
Charge condition	Wet
Technology	Calcium-Calcium
Weight	22,Kg (+/-1.5%)

TECHNICAL PROPERTIES	L x A x AL
Overall dimensions	353 x 175 x 175mm
Case material	Polypropylene
Lid material	Polypropylene
Case colour	Black
Lid colour	Black
Degassing system	Central
Charge indicator	NO
Terminal type	1 (DIN)
Terminal layout	0
Base hold down	B13

(+) PLATE	
Grid casting technology	Expanded grid
Alloy type	Pb - Ca

(-) PLATE	
Grid casting technology	Expanded grid
Alloy type	Pb - Ca

SEPARATOR	
Type	Envelope
Material	Polyethylene HP

ELECTROLYTE	
Electrolyte	1.270 (+/-0.01g/cm^3)

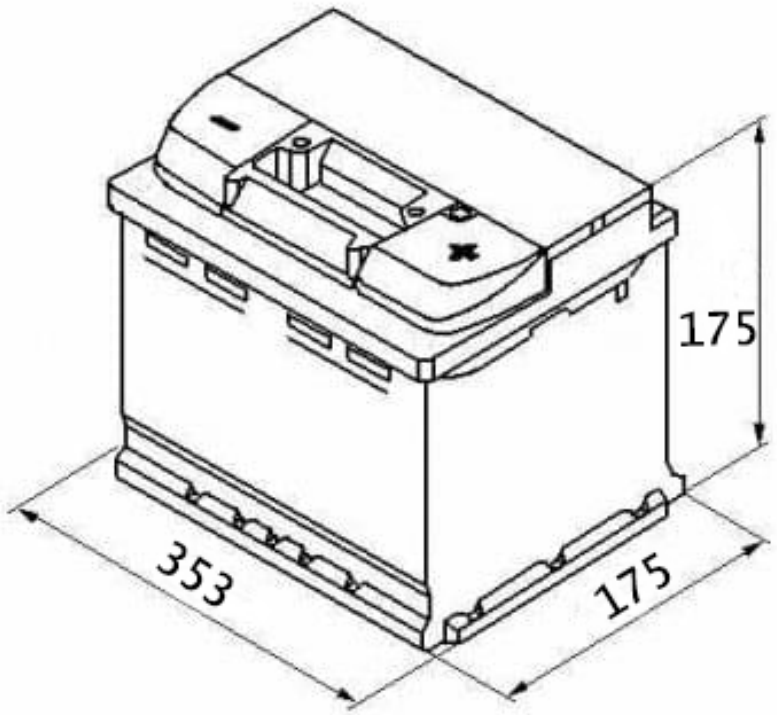

NORMA DURACION DE VIDA CEI - EN - 50342-1

Fabricado en **C.E.** según las normas **ISO 9001 – ISO 14001 e I.P.P.C.**